Applications of New Technologies in Japan – Positive Collaboration between Design and Construction

Masayoshi Nakashima

Professor
Disaster Prevention Research Institute
Kyoto University, Japan

Today's Topics

- **Japan is Green, featured with "Wood Culture".**
  Traditional use of line (1D) elements (rather than plane (2D) elements)
  Popularity of steel as extension of wood

- **Japan loves "detailing", which characterizes Japanese architecture.**
  Complicated roofing details, exquisitely crafted eaves, complex connections using interlocking, etc.
  Similar appreciation to modern buildings

- **Japan loves handcraft and manufacturing.**
  Relatively high public status for "manufacturers"
  Love to new invention and sophisticated engineering
  Excessive "technology-driven" attitude, leading to Galapogisization.

Today's Topics

- **Japan exercises positive collaboration between design and construction (manufacturing)**

  Equal partnership between design and construction
  Quality assurance by disciplined construction

- **Japan uses "peer-review" for introduction of new technology.**

  Acceptance of new technologies beyond what is explicitly stated in codes/regulations
  Fast track by peer-review versus slow standadization

Today's Topics

Japan is Green, featured with "Wood Culture".

- **Traditional use of line (1D) elements (rather than plane (2D) elements)**
- **Popularity of steel as extension of wood**

Japan, a country blessed with mountains and wood

Areas Covered by Green

Wood – traditional material for constructions

Example Wooden Houses

Annual Building Construction in Japan

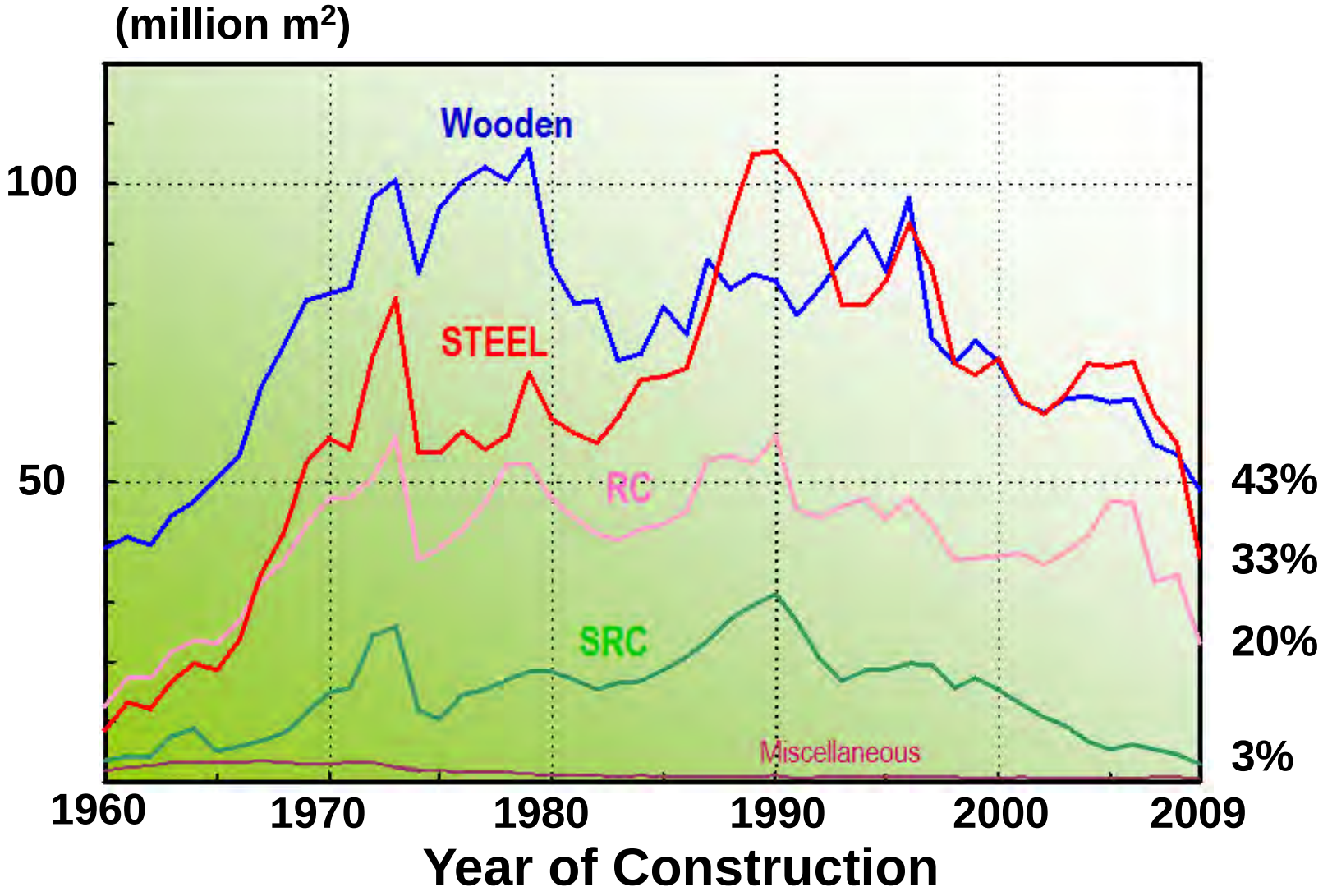

Yes, steel is very popular in Japanese Construction.

Resemblance between Wood and Steel Construction

Framing slender members

Rigid connections between beams and columns

Application to Large Structures by Wood and Steel

Todaiji Temple,
World Largest Wooden Building

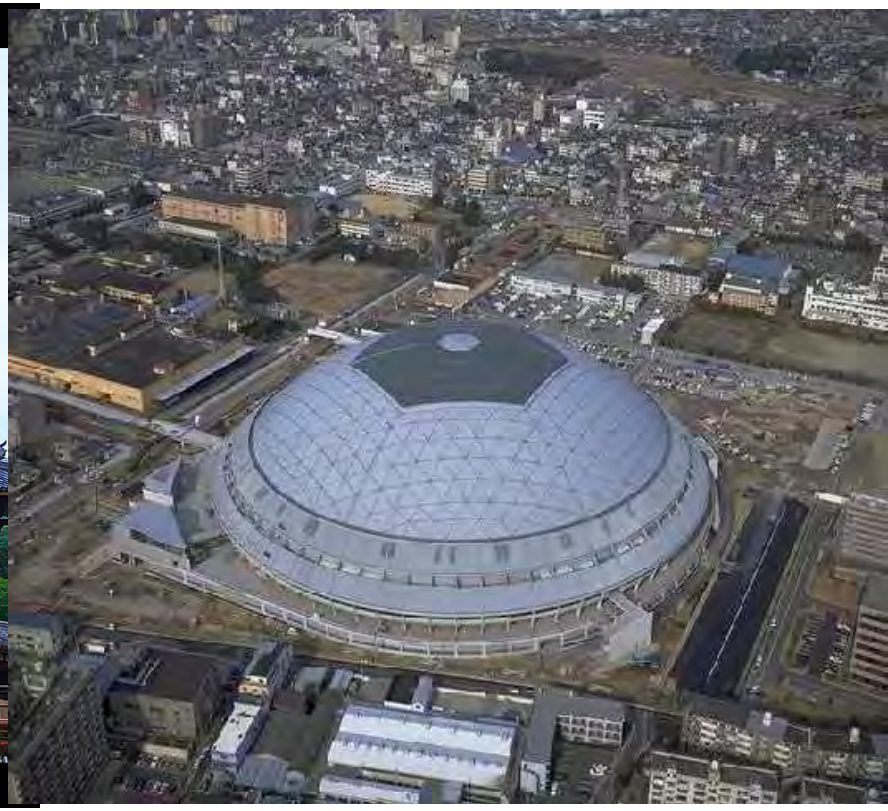

Nagoya Dome,
Made of steel trusses

Application to Towers by Wood and Steel

Toji Pagoda,
Tallest Wooden Tower

Eifle Tower

TokyoTower

Special Structures Using Novel Technologies

Tokyo Sky Tree (634 meter)

Mode Gakuen

Nagoya Dome

Japan and Steel

Japan is destined to use and love steel by culture.

Steel is characterized by

"fast construction (preparation done in factory)", "quality control (fabricated in factory)", and "versatile applications (from small, large, tall, strange....)

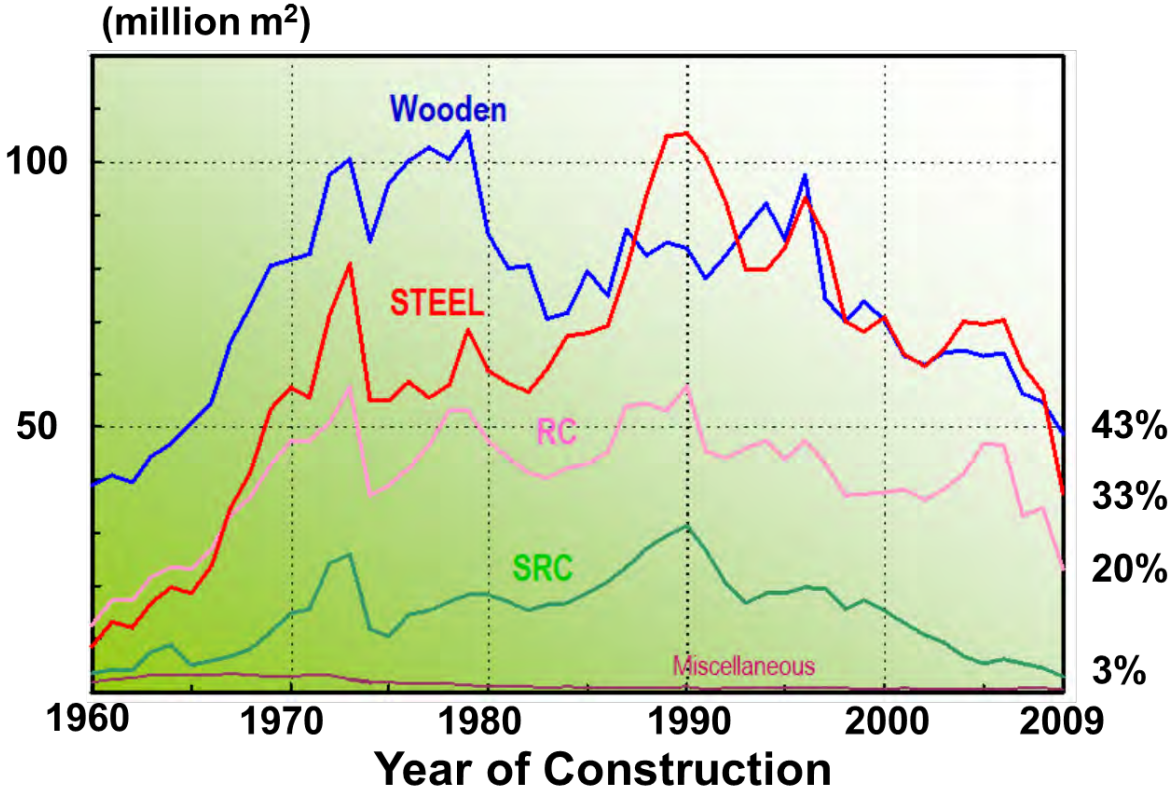

Today's Topics

Japan loves "detailing", which characterizes Japanese architecture.

- **Complicated roofing details, exquisitely crafted eaves, complex connections using interlocking, etc.**
- **Similar appreciations to modern buildings**

Today's Topics

We inherited many of those masterpieces for the past fifteen centuries

Connection made of exquisite interlocking

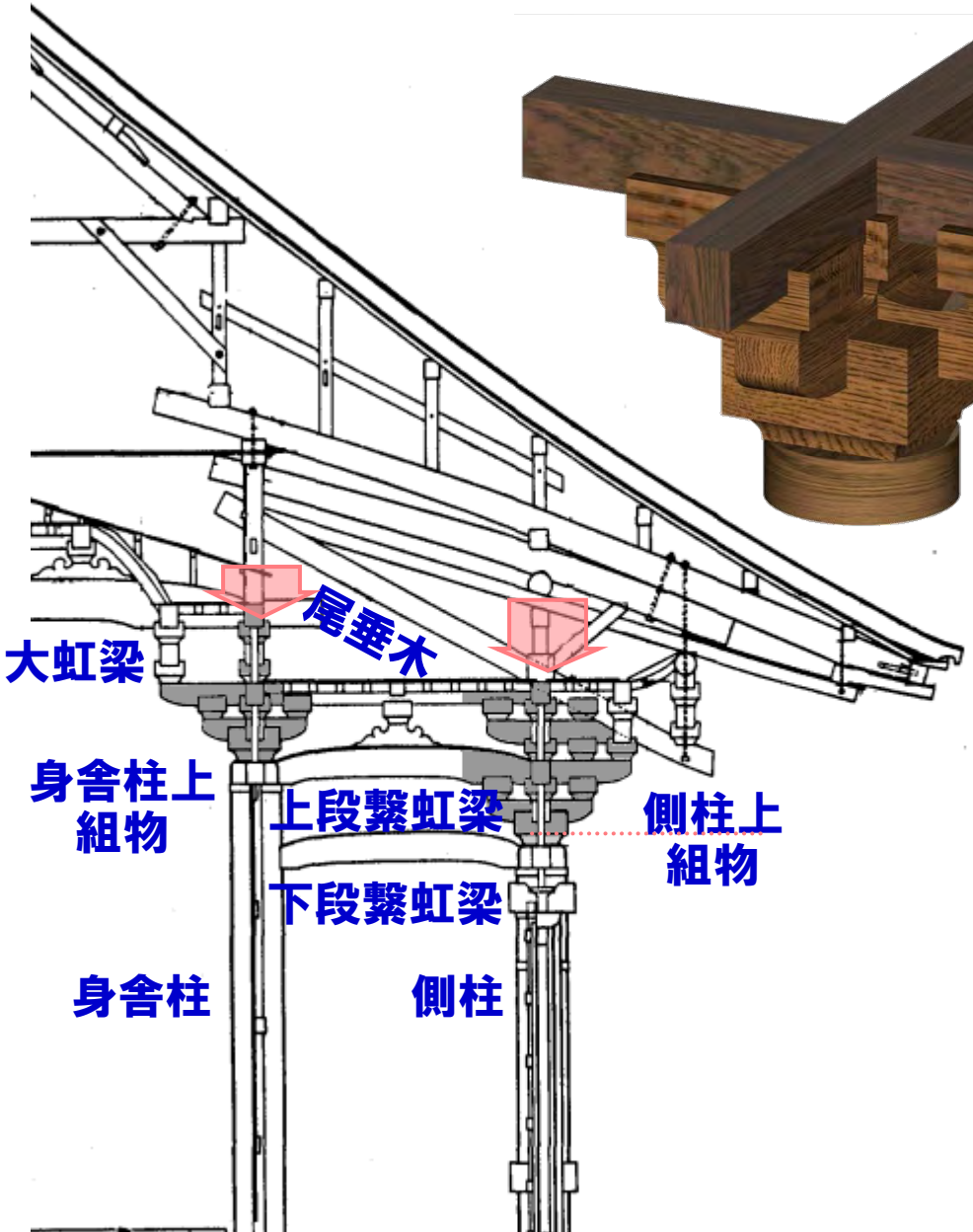

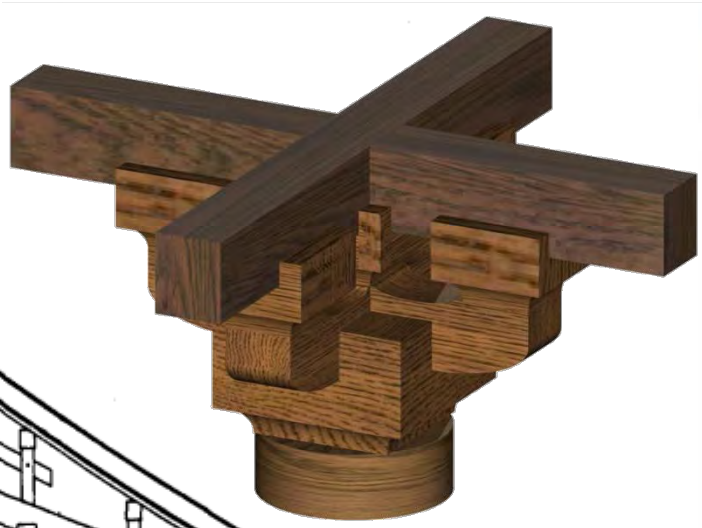

Connection made of exquisite interlocking

くみもの（組物）　　なかぞなえ（中備）

出組でぐみ　平等院鳳凰堂

二手先ふたてさき　室生寺金堂

蟇股かえるまた　長保寺多宝塔

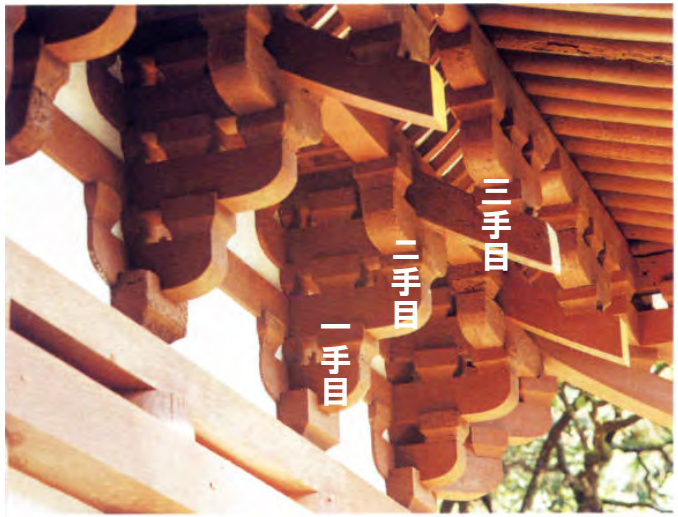

三手先みてさき　室生寺五重塔

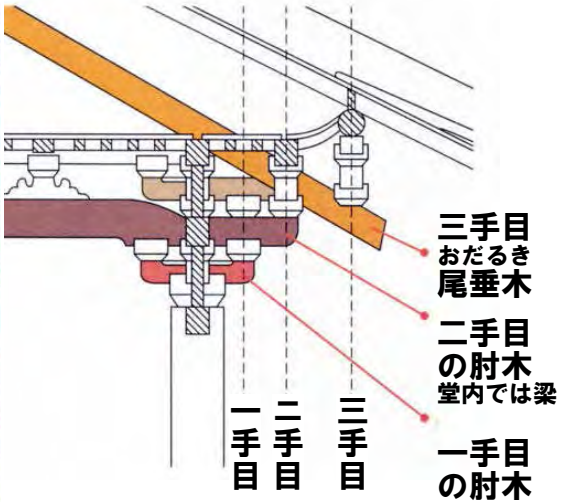

組物の構造

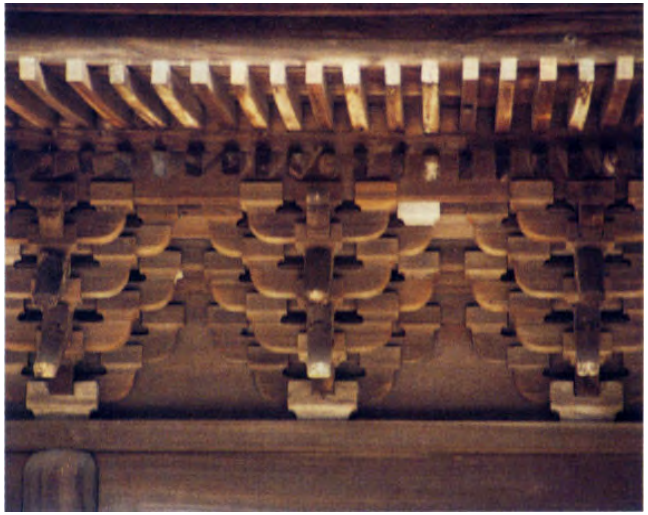

詰組つめぐみ　円覚寺舎利殿

Today's Topics

Japan loves Handcraft and Manufacturing.

- Relatively high public status for "manufacturers"
- Love to new invention and sophisticated engineering
- Excessive "technology-driven" attitude, leading to Galapogisization.

Respect to Craftsmanship

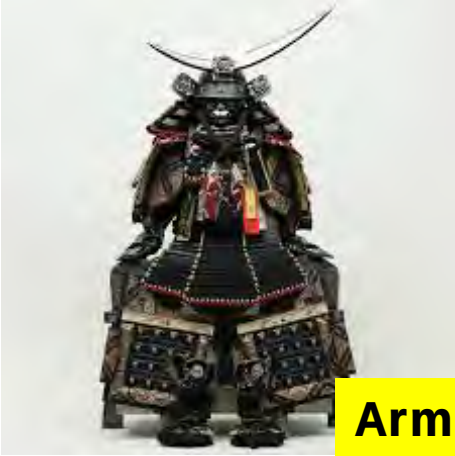
Armor


Umbrella


Pottery


Doll


Fan


Ceramic

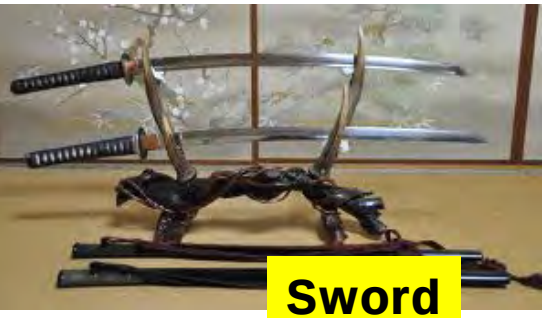
Sword


Iron


Bamboo ware


Mask


Wood Carving


Lacquer


clothes

Respect to Craftsmanship (continued)

Japanese is “good with hands”.


Weaving


Knitting


Weaving


Swordsmith

Innovation of Steel Construction in Japan

Japan loves "*innovation*" via "*manufacturing*".

Material-Oriented Development

- □ High-Performance Steel
- □ Ultra High-Strength Steel
- □ Fire-Resisting Steel
- □ High Toughness Steel
- □ Ultra High-Strength Bolts
- □ Low-Yield Steel
- □ Energy-Friendly High-Strength Steel

Devise-Oriented Development

- □ Buckling-Restrained Braces
- □ Concrete Filled Steel Tubes (CFT)
- □ etc.

High-Performance Steel

– Introduction of “SN Steel Grade” –

- □ Controlled Yield Strength
- □ Controlled Ultimate Strength
- □ Controlled Yield to Ultimate Strength Ratio
- □ Adopted in JIS (Japan Industrial Standards)

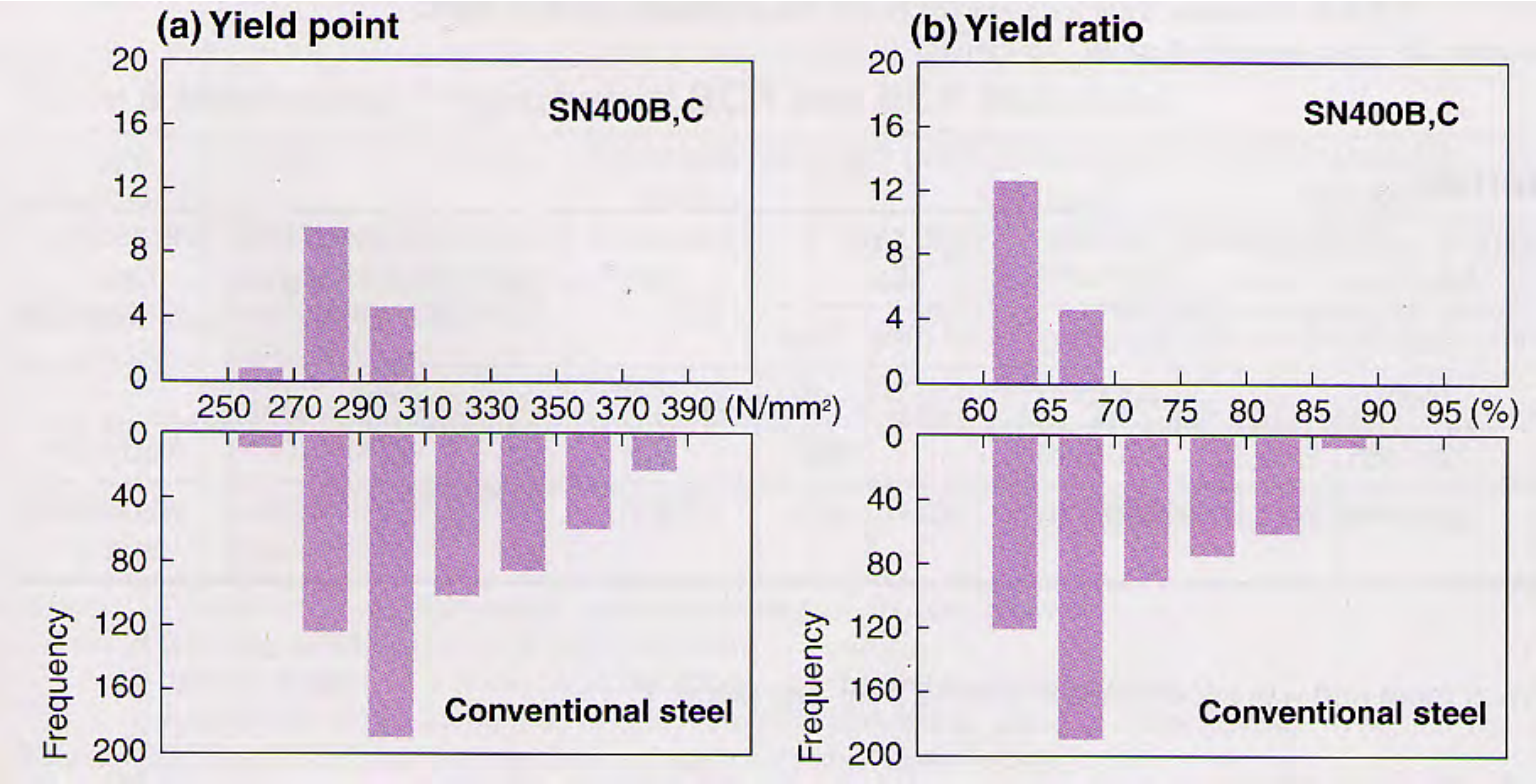

Fire-Resisting Steel

- Higher resistance against temperature
- Less requirement for fire insulation

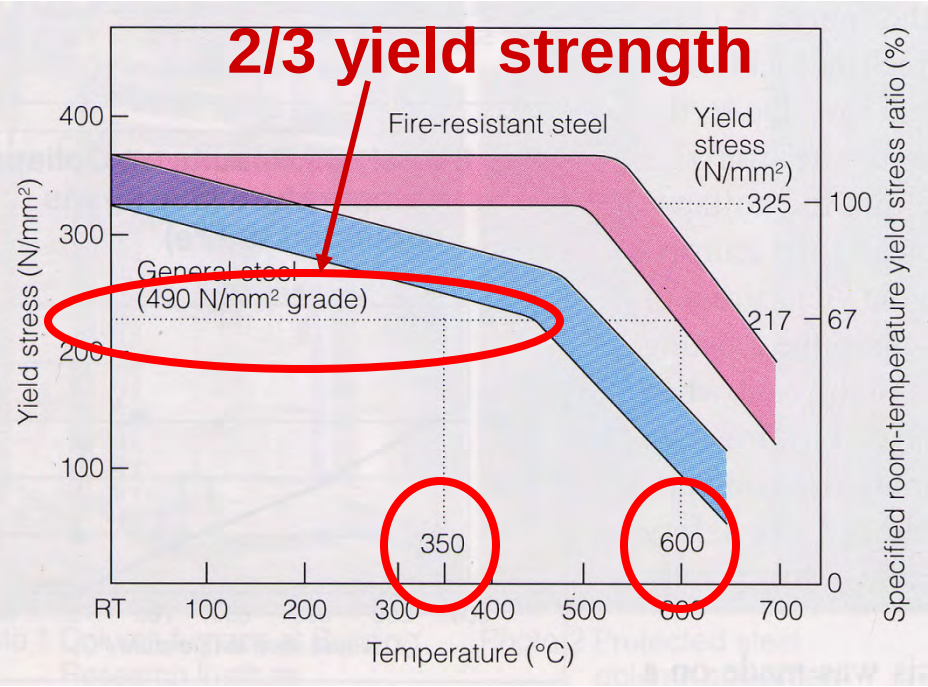

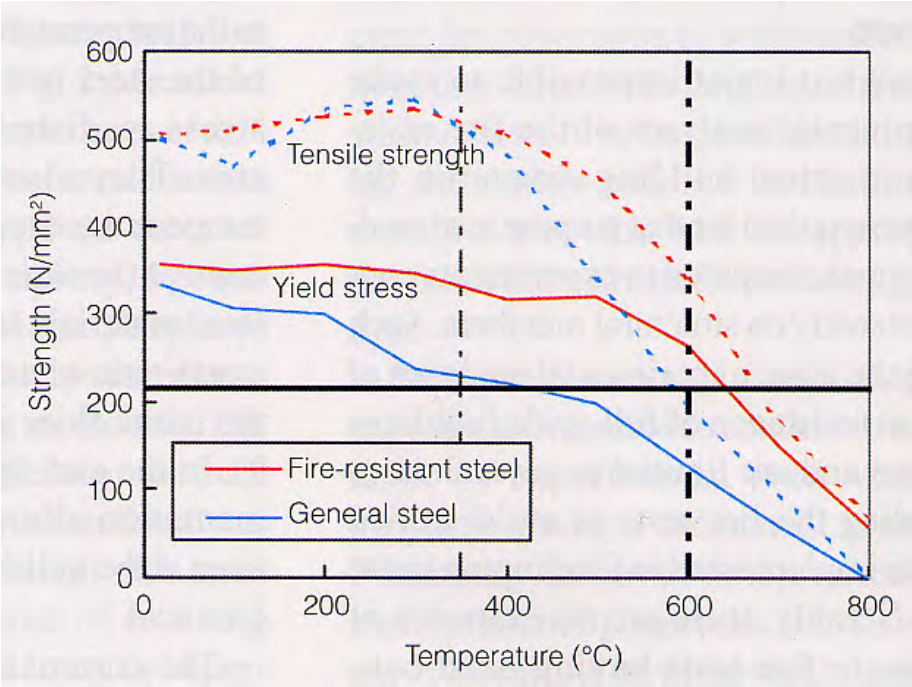

Low-Yield Steel

- □ Lower yield strength (100 MPa to 200 MPa)
- □ Larger uniform strain
- □ Larger strain hardening in cyclic loading
- □ Used as damper material

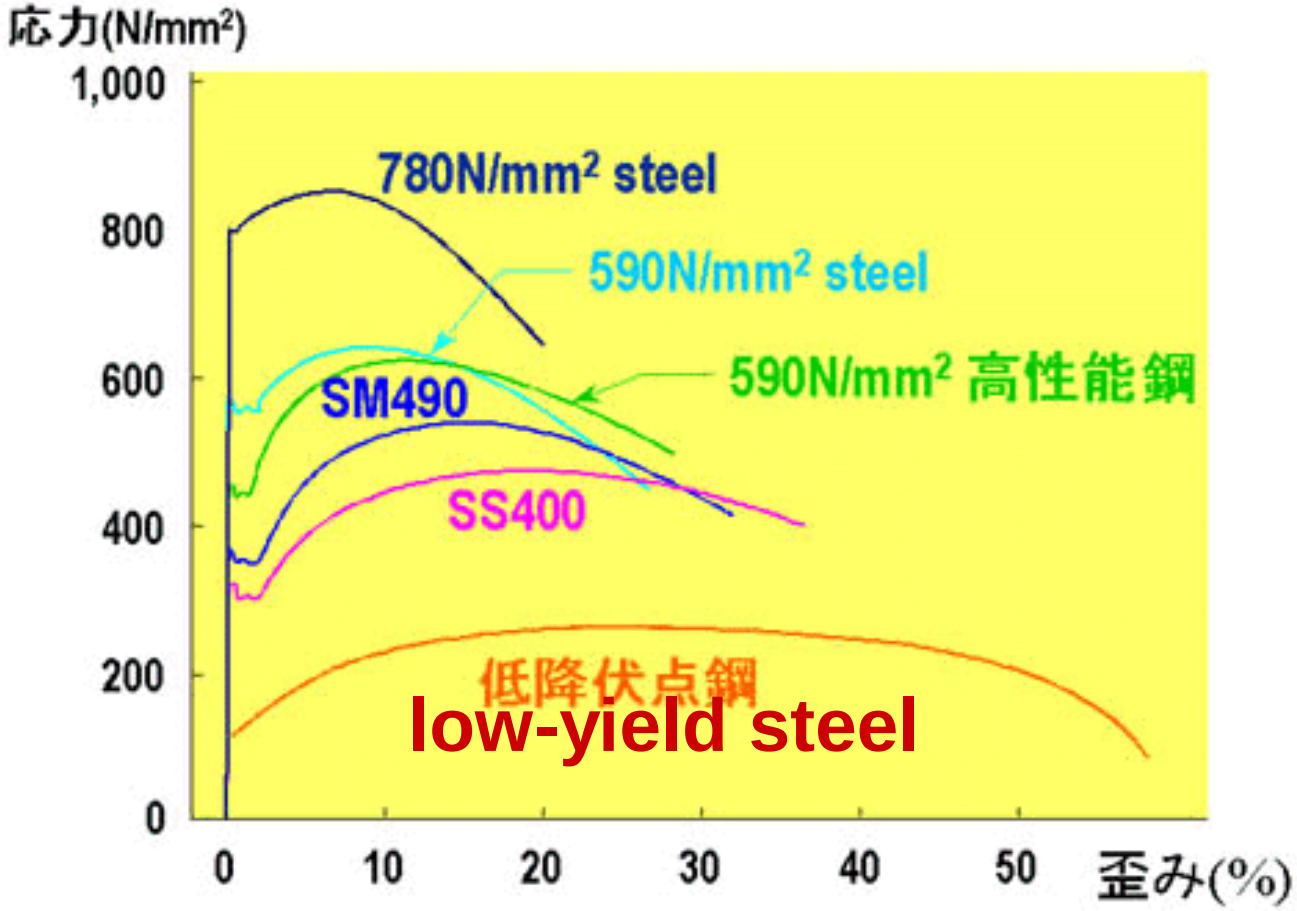

Buckling Restrained Braces

Brace is good in providing both strength and stiffness if it does not buckle.

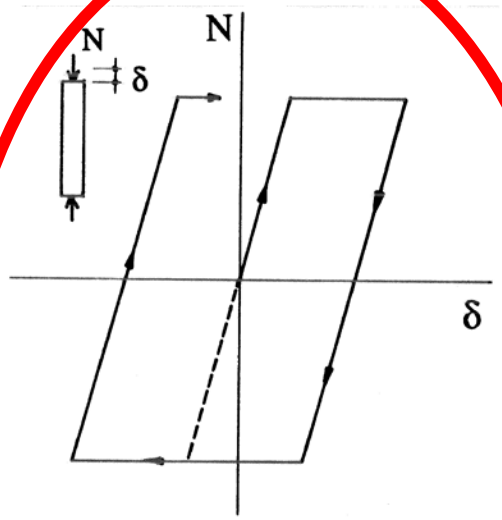

Short Brace (no buckling)

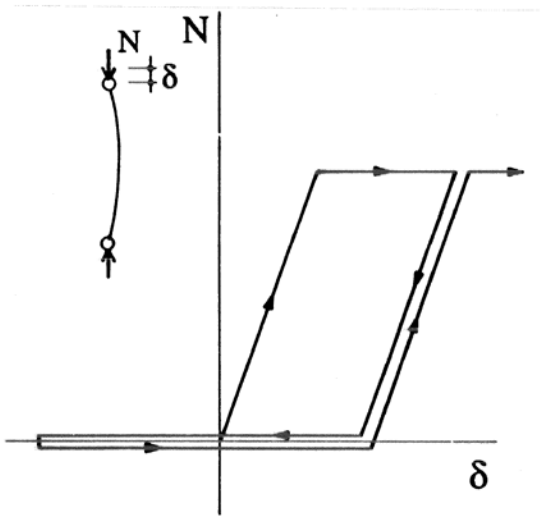

Long Brace

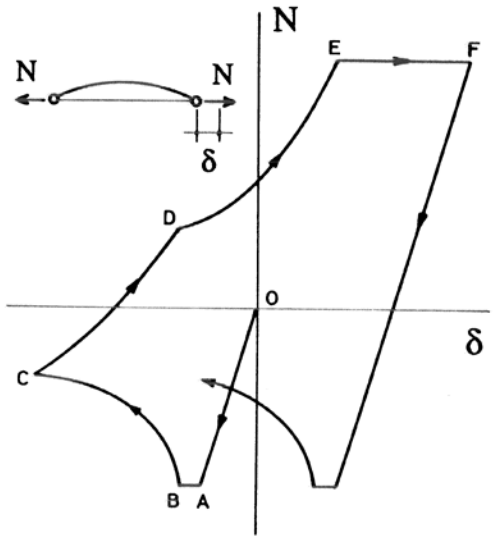

Intermediate Brace

Example of Buckling Restrained Braces

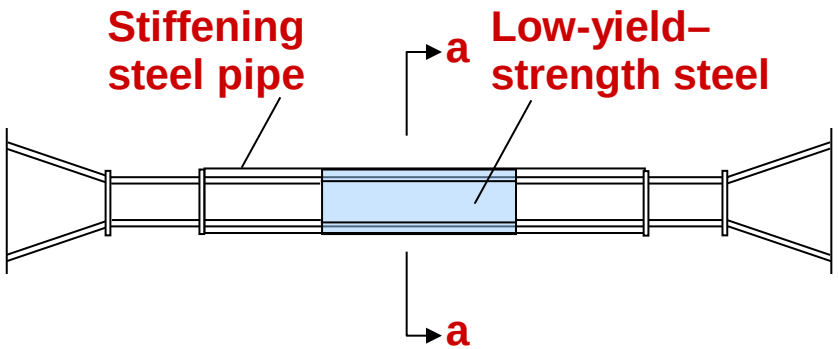

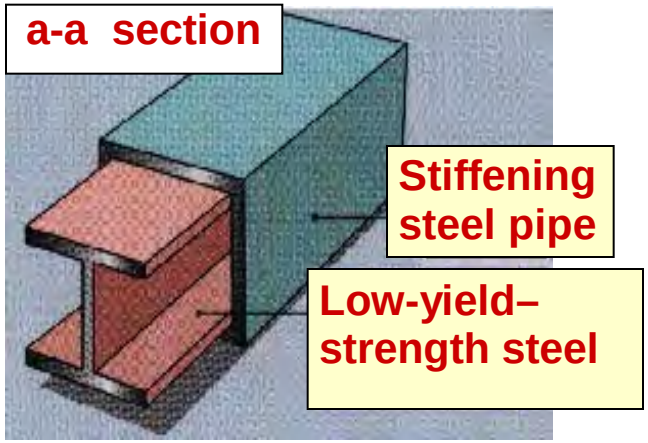

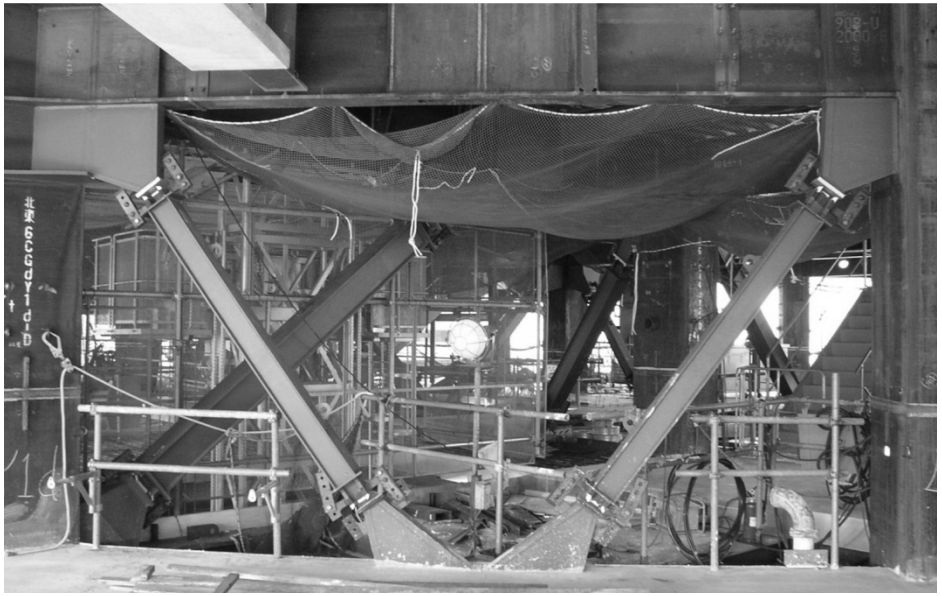

Buckling Restrained Braces

Restraining of buckling of brace wrapped by encasement

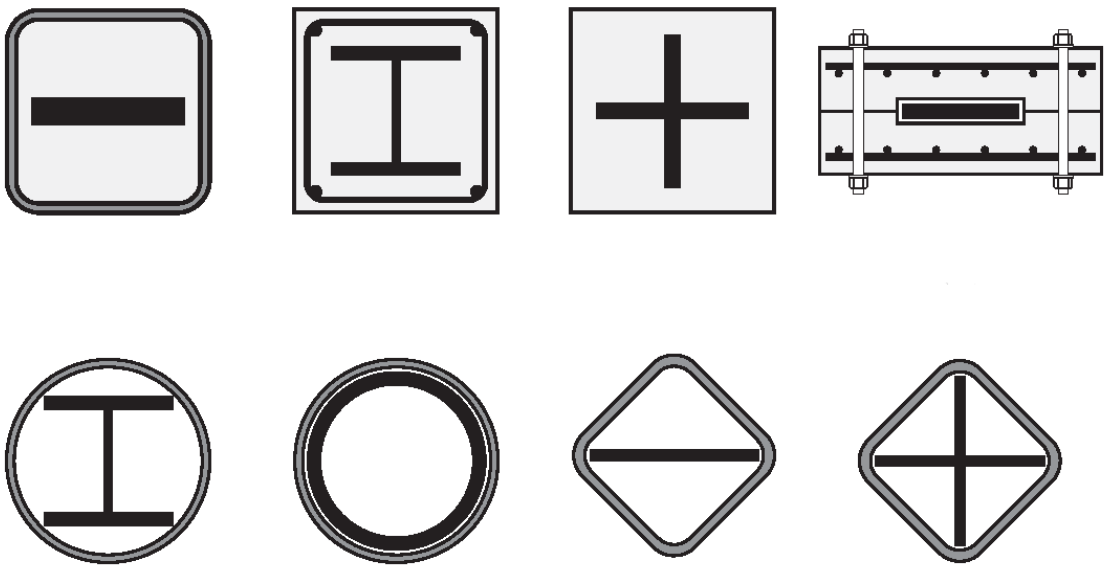

Types of encasement

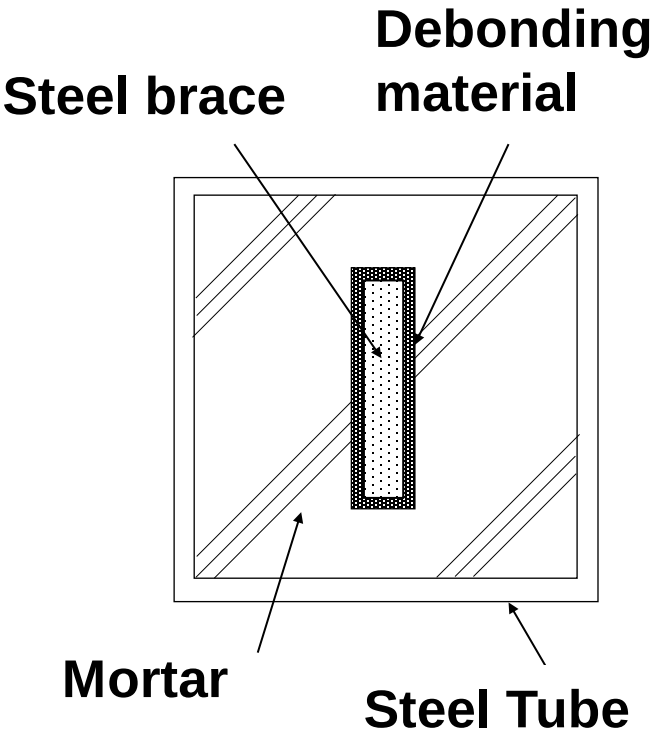

Example of Debonding Details

Concrete Filled Steel Tube (CFT)

Familiarities to Composite Structures – Use of SRC for decades

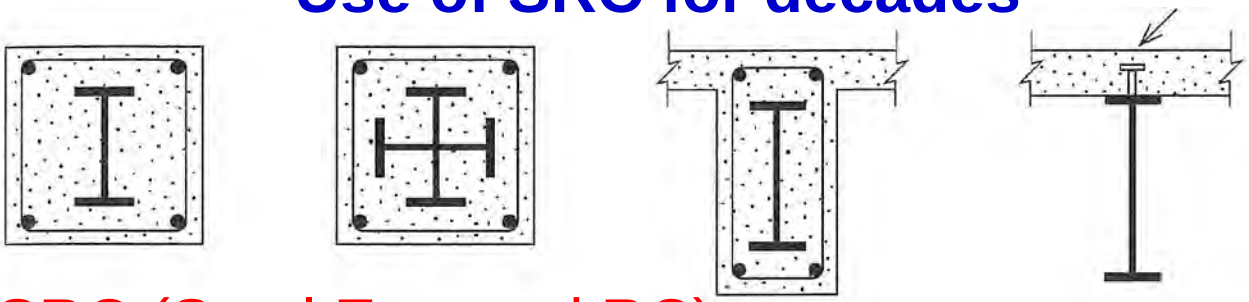

SRC (Steel Encased RC)

Composite Slab

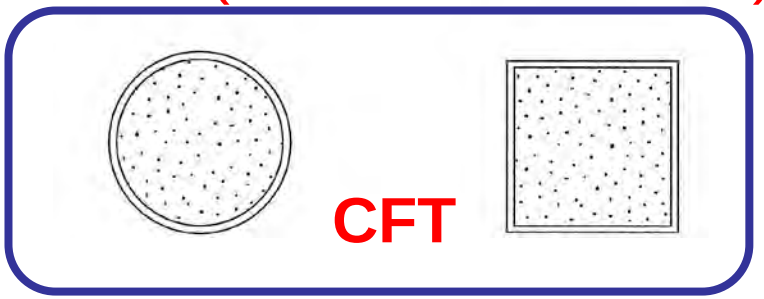

CFT

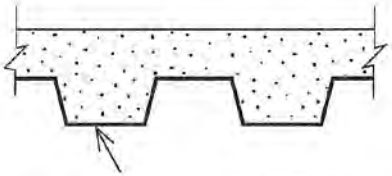

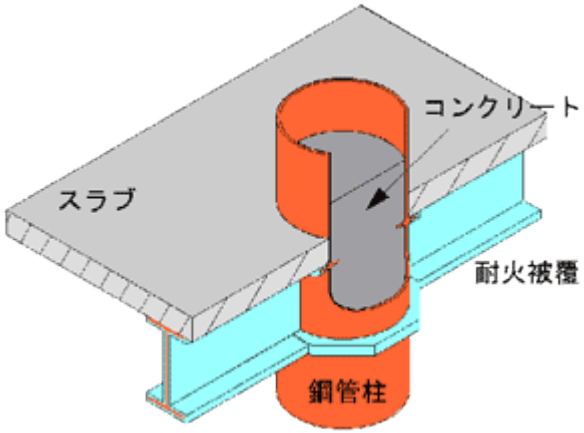

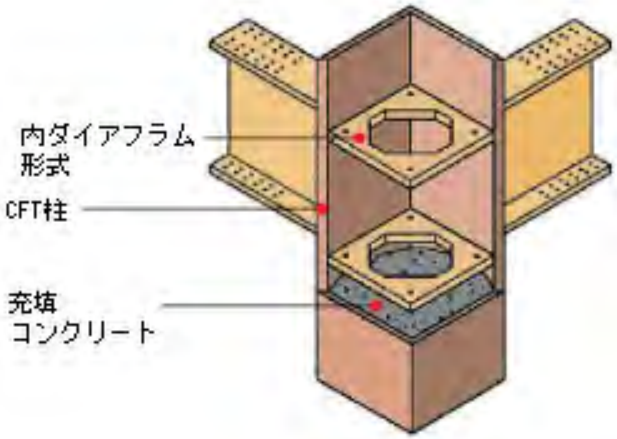

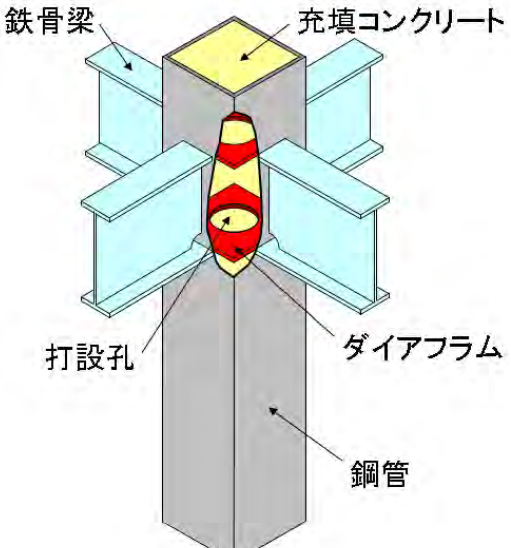

CFT – Construction

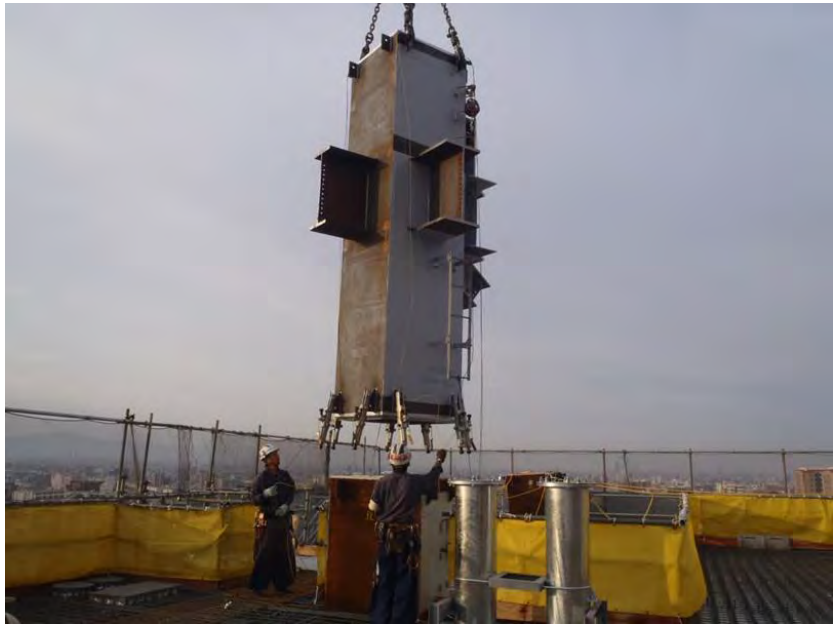

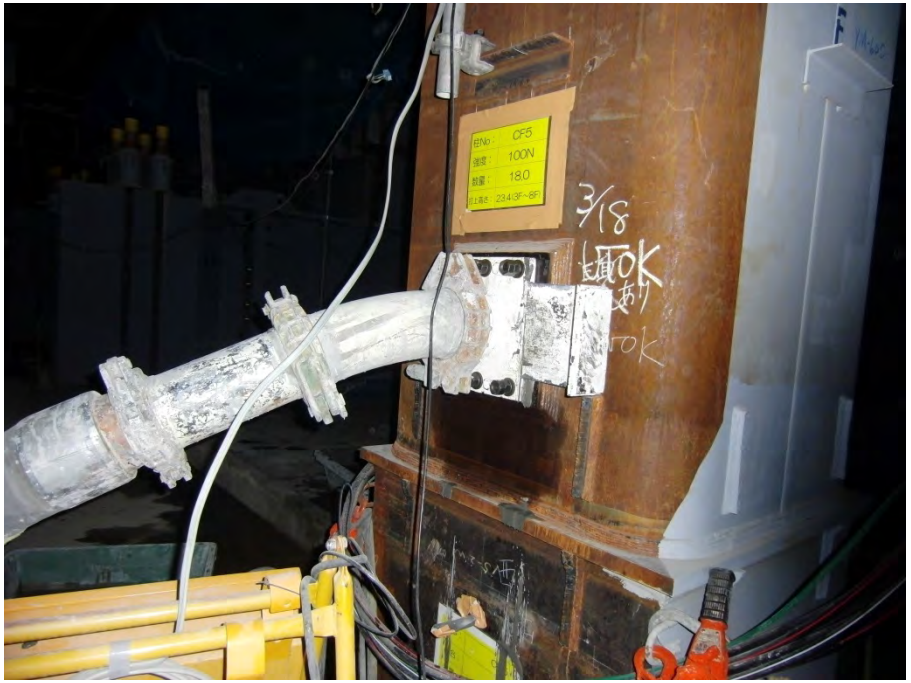

Push-in of Concrete

A new venture for further innovation

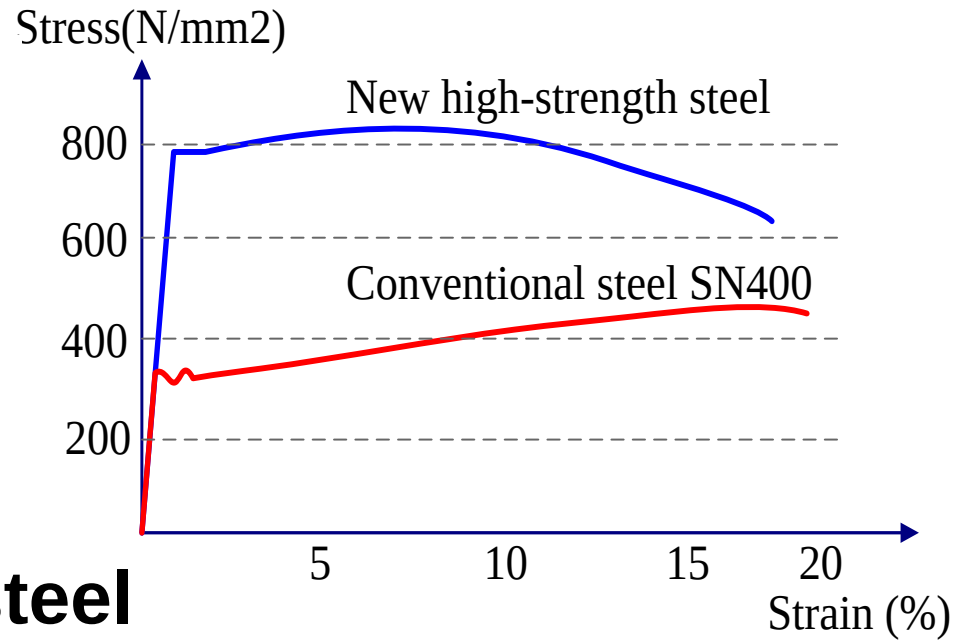

New ultra high strength steel

thermo-mechanical control process

CO_2 ↓

Alloying elements ↓

Environment-friendly

Resources saving

Reusable

Galapogosization

Excessive "technology-driven" attitude (relative to business-driven), leading to Japanese <u>Galapagisization</u>.

Island of Galapagos

Famous Japanese Galapagos Cellphone

Global Standard Smartphone

Today's Topics

Japan exercises collaboration between design and construction (manufacturing)

- **Equal partnership between design and construction**
- **Quality assurance by disciplined construction**

Design versus Construction

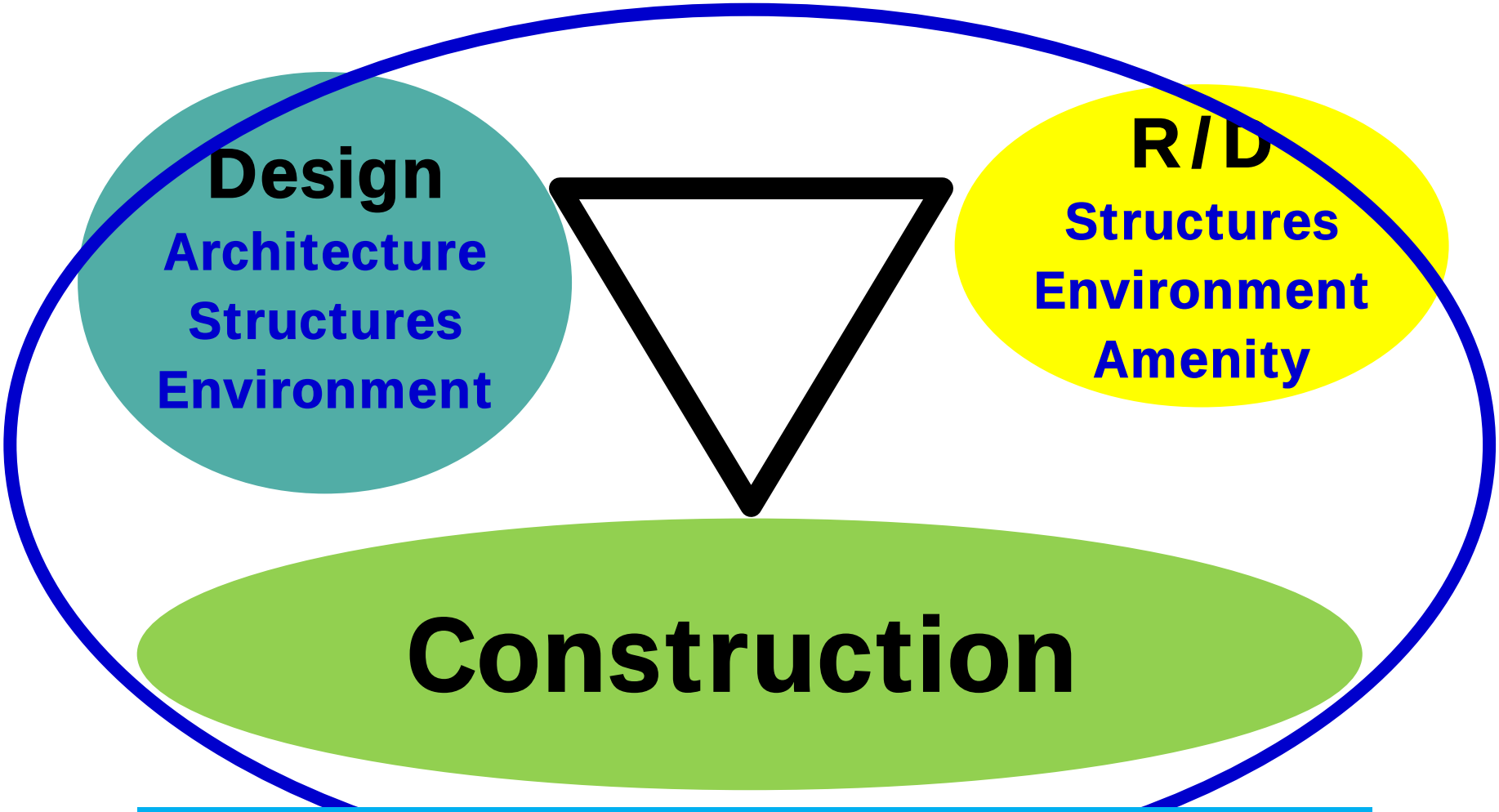

Japanese Way:

- **Positive Interaction among sectors**
- **Culture of respect to manufacturing**

Clean, Disciplined Construction

Management of Hundreds of Technicians of Various Occupations

Morning Assembly

Gymnastic Exercises

Instruction Session for Cranes

Schedule Checking

Clean, Disciplined Construction

Efforts to Maintain Clean Construction Site

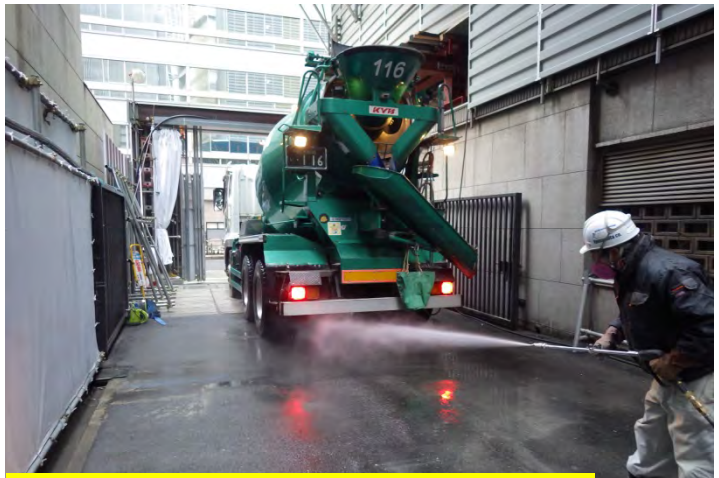

Cleaning Truck Tires

Sweeping

Keeping things tidy and in order

Slogans

Clean, Disciplined Construction

Safety Control and Management

Covering Construction Site

Lifelines

Daily Check of Safety Issues

Attention to Level Difference

Design versus Construction

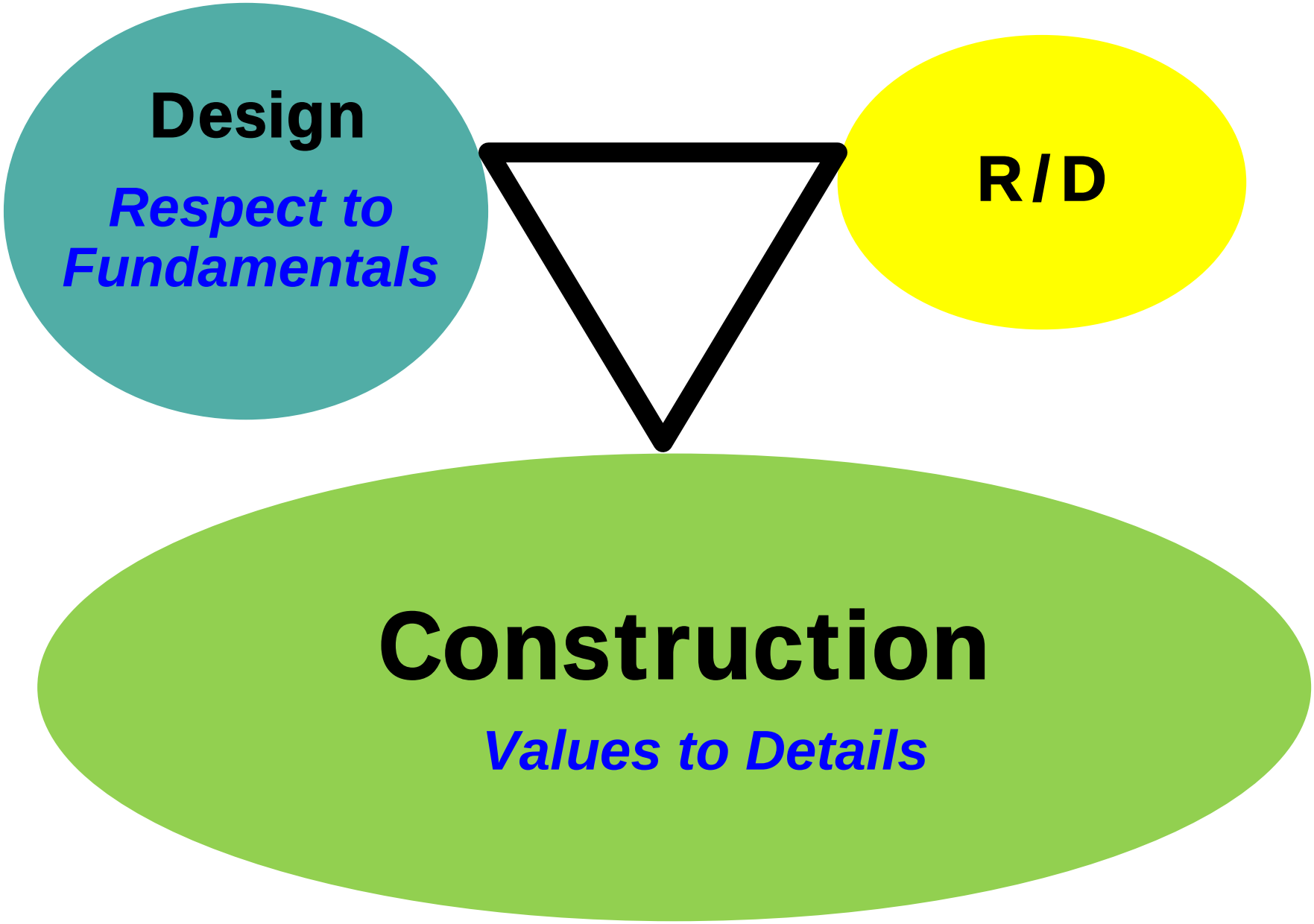

Design versus Construction

"*Construction*" (relative to "Design") has more direct impact on business.

"*Details*" (relative to "*Fundamentals*") are the heart of structural engineering in particular in the Japanese construction society.

Two notable examples:

- Rapid growth of base-isolation after Kobe
- Significant difference in solutions after Northridge and Kobe

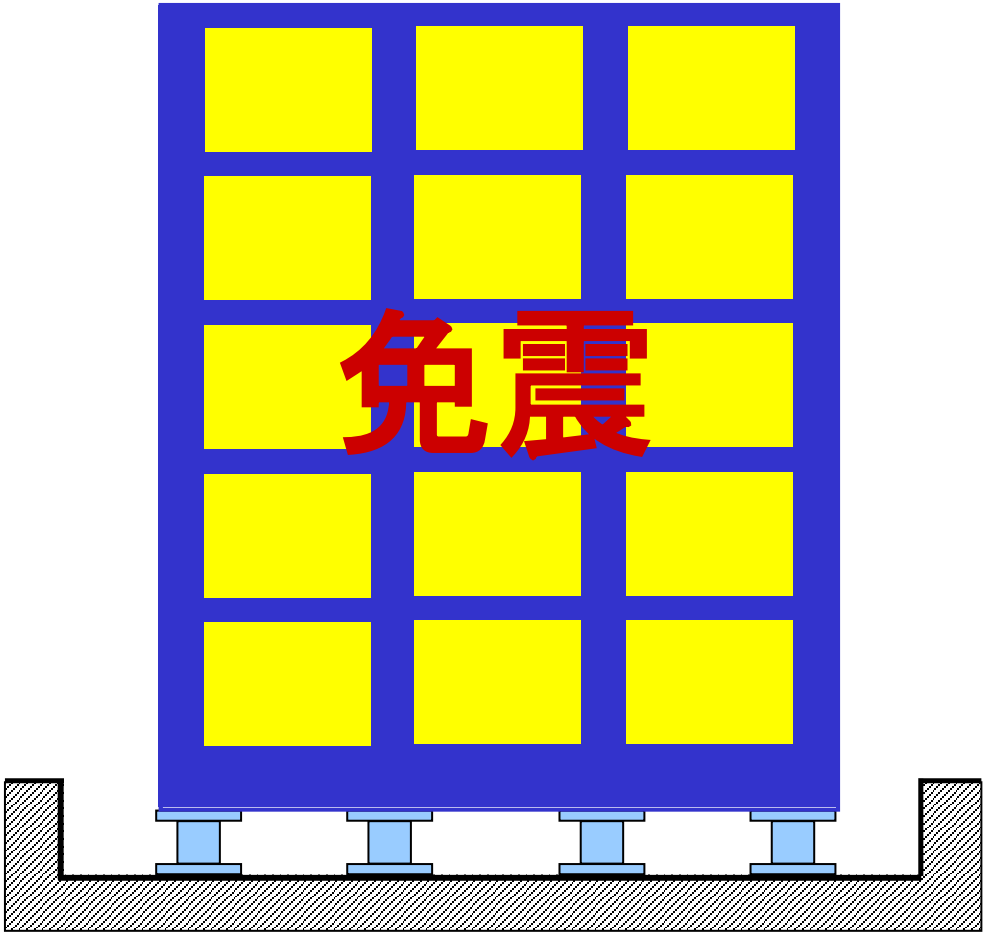
免震

Significant Growth of Applications to Base-Isolated Systems after 1995 Kobe

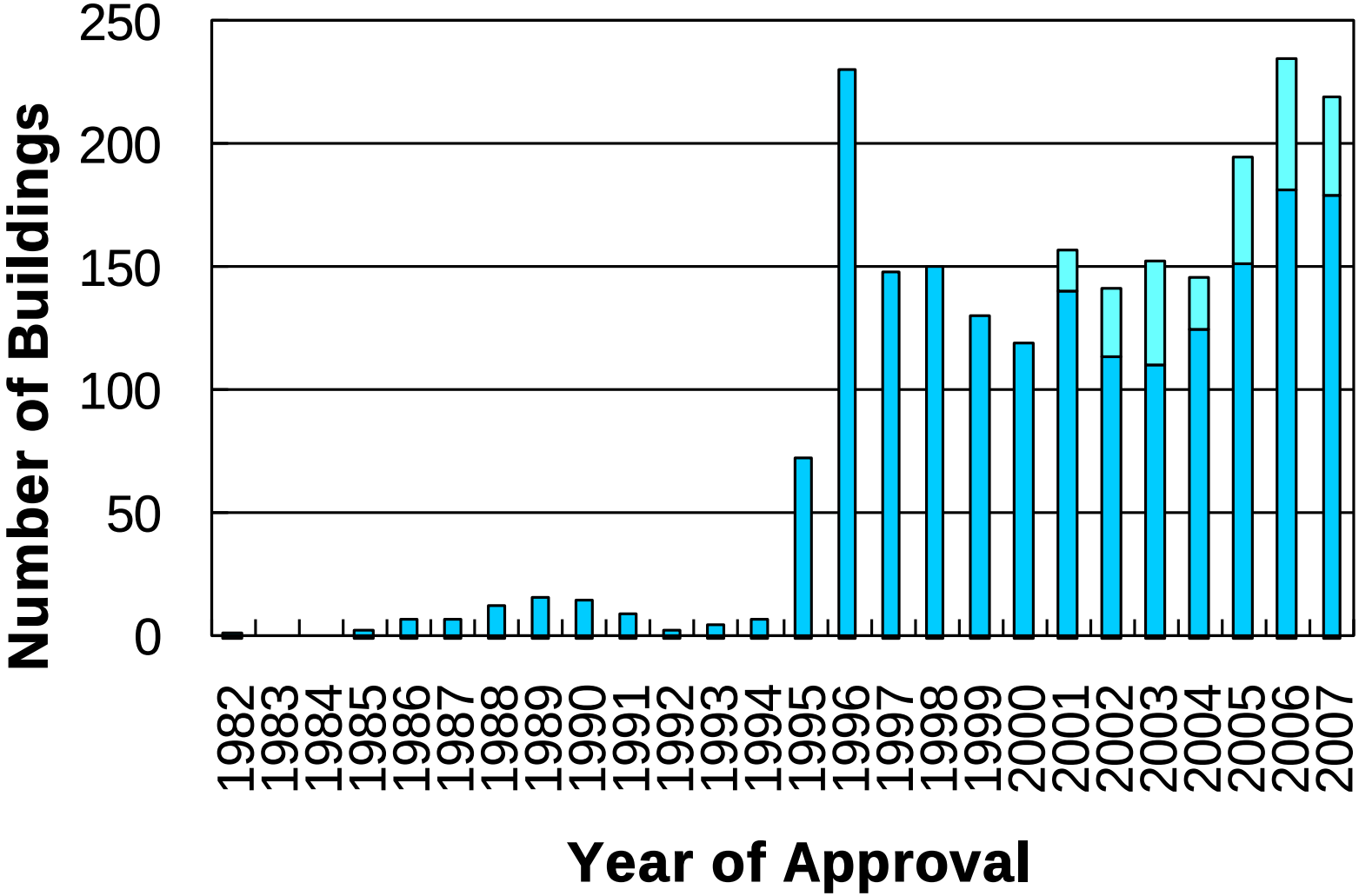

Road to Acceptance of New Technologies

Long-term hesitance to accept new technologies until perceived equivalence of "COST"

Continuing efforts for promotion

In the right place at the right time

Necessary Conditions

Solid background for technologies

Availability of physical and human resources

Damaging Earthquake

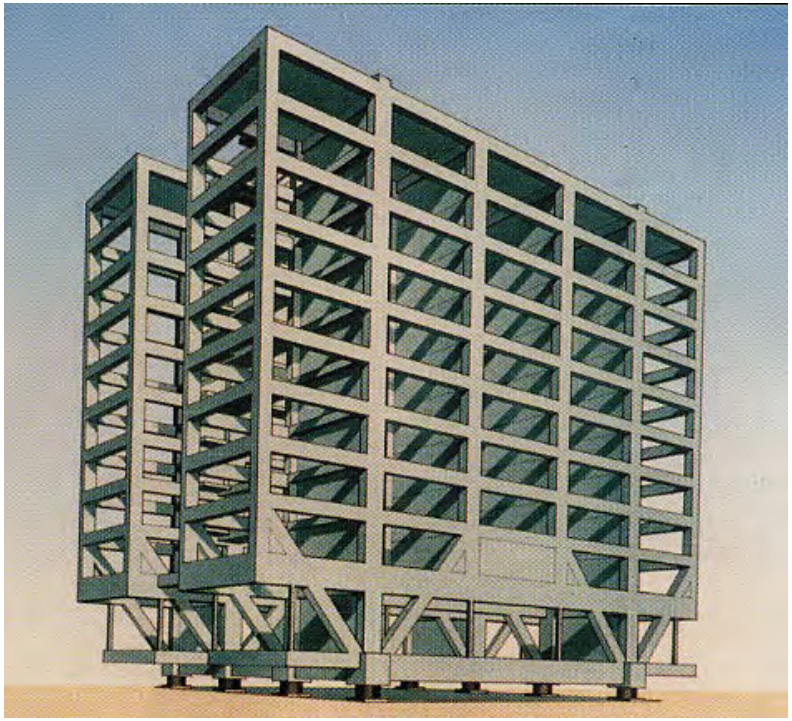

Road to Acceptance of New Technologies

Long-term hesitance to accept new technologies until perceived equivalence of "COST"

Continuing efforts for promotion

In th

Without Solid Existence of "Construction Industry", Nothing could be Constructed.

Nece

Solid background for technologies

Availability of physical and human resources

Damaging Earthquake

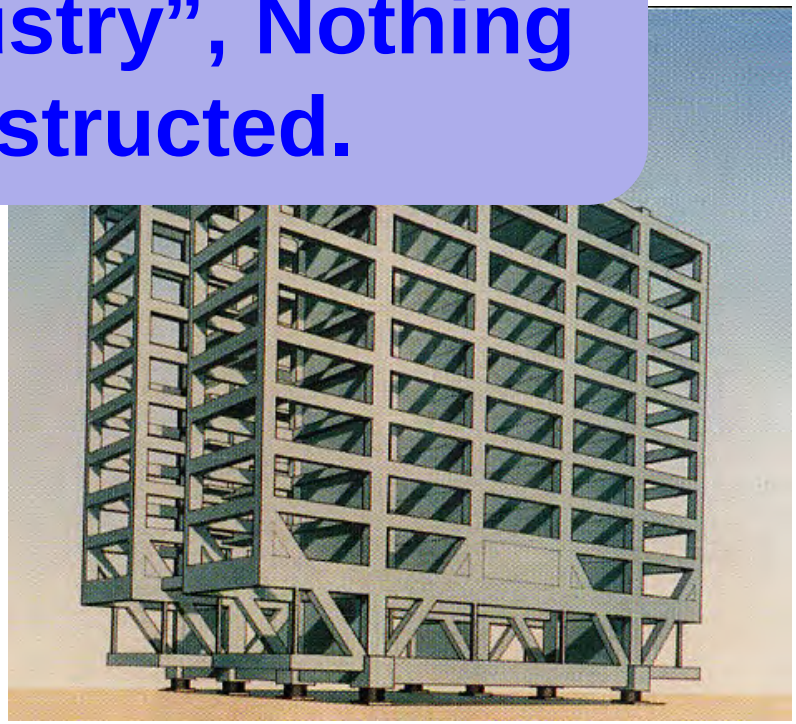

Fractures of Welded Beam-to-Column Connections

– damage similar to those observed in 1994 Northridge –

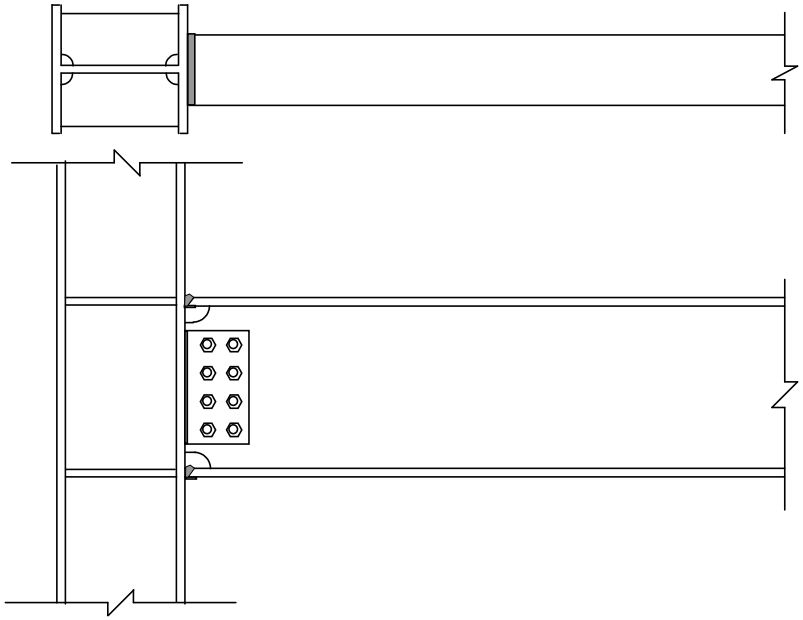

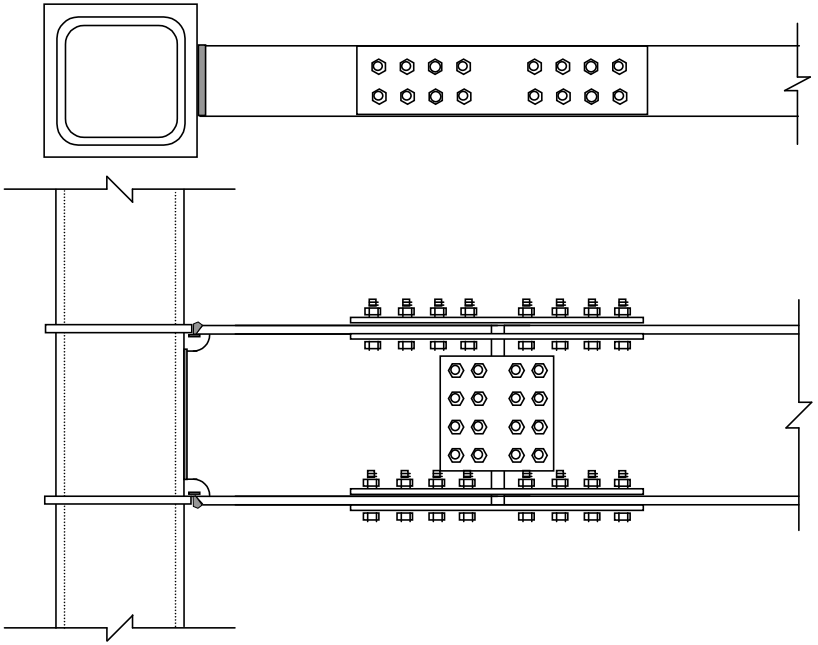

Fractures of Welded Beam-to-Column Connections

– damage similar to those observed in 1994 Northridge –

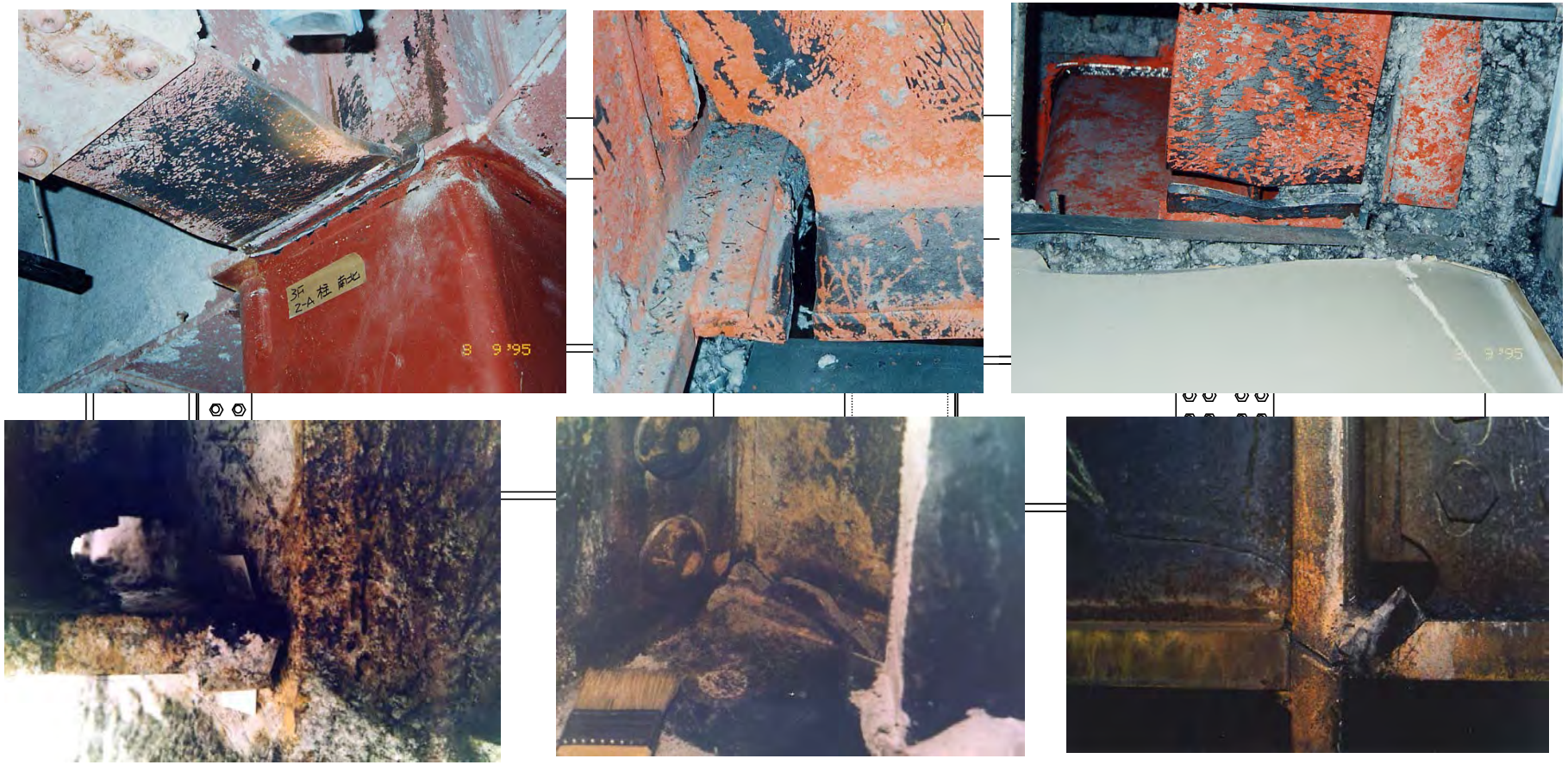

Different Approaches for Post-Earthquake Design and Construction Efforts

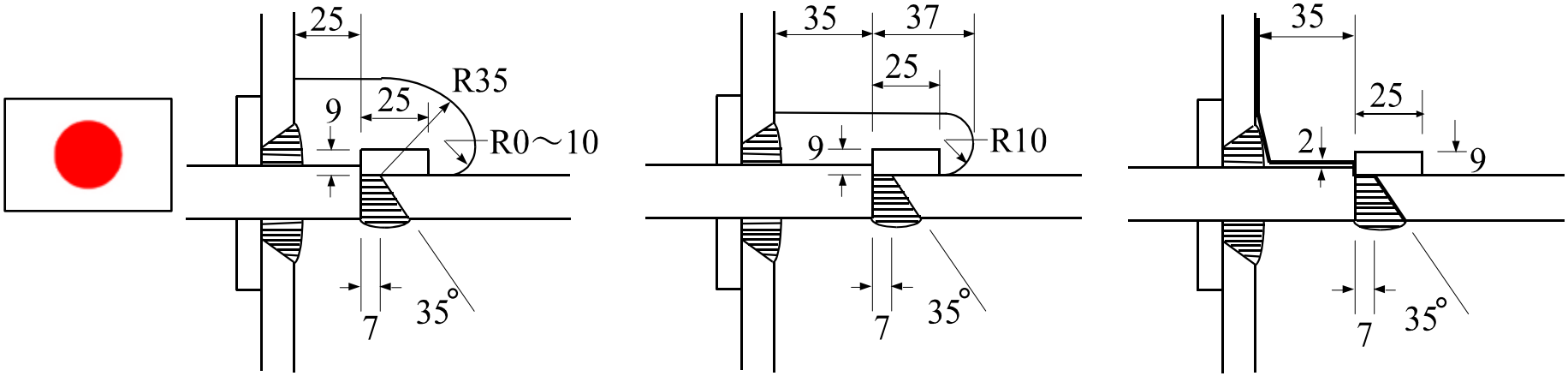

Strengthening Joints

- **Smaller holes or No-holes**
- **HAZ-tough steel**
- **High-toughness welds**
- **Higher quality control**

Different Approaches for Post-Earthquake Design and Construction Efforts

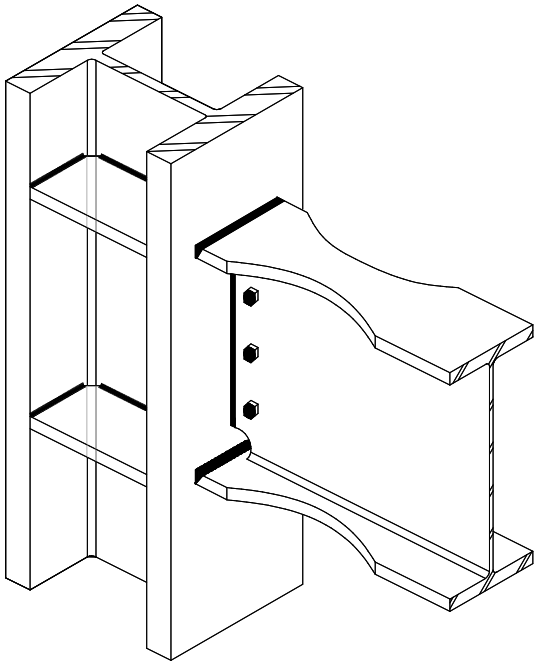

Reducing Stresses Applied to Joints

- **Haunches and Ribs**
- **RBS**

Seismic Performance of Welded Beam-to-Column Connection – U.S.-Japan Comparison

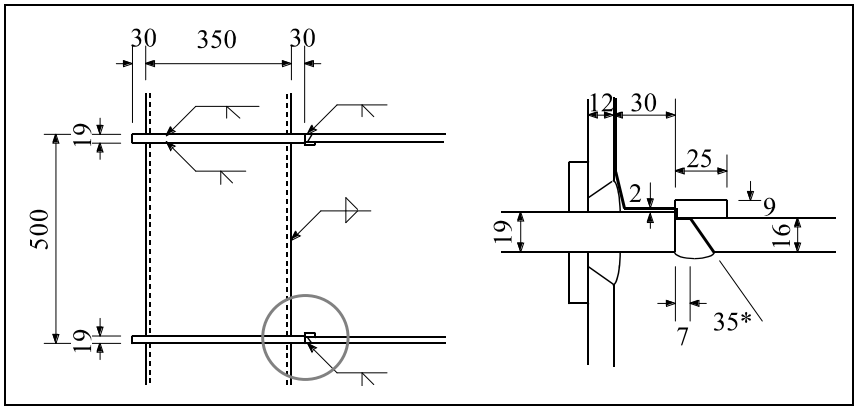

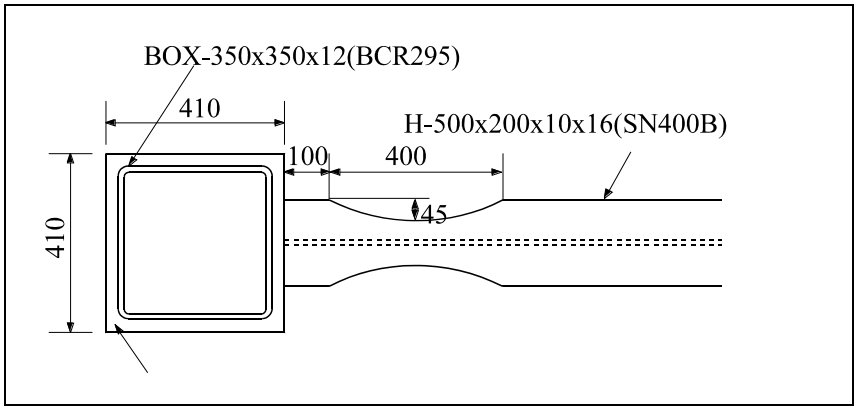

Japan's No-Hole

US RBS

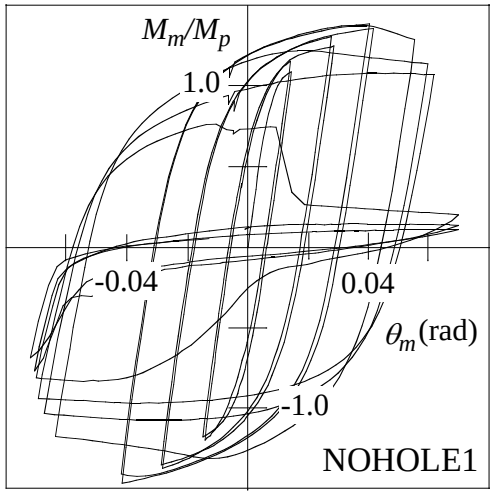

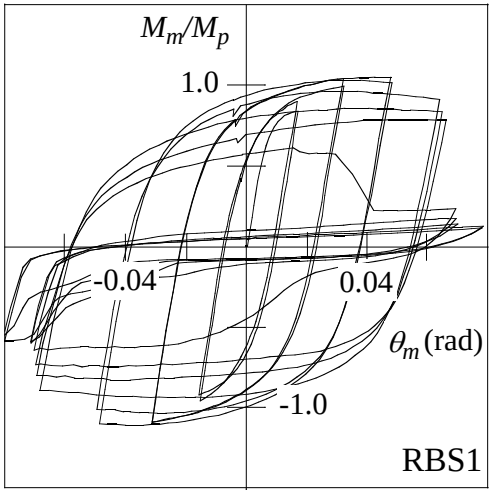

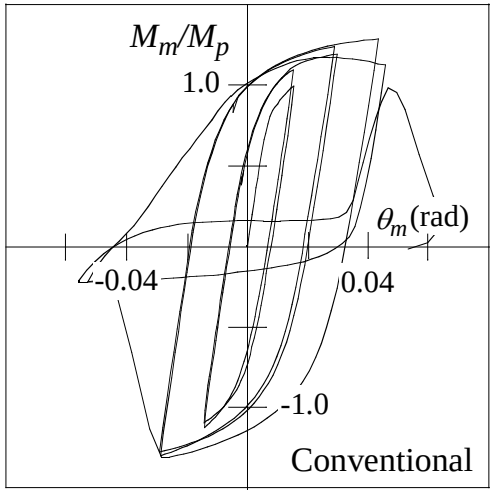

Test Results and Performance

Seismic Performance of Welded Beam-to-Column Connection – U.S.-Japan Comparison

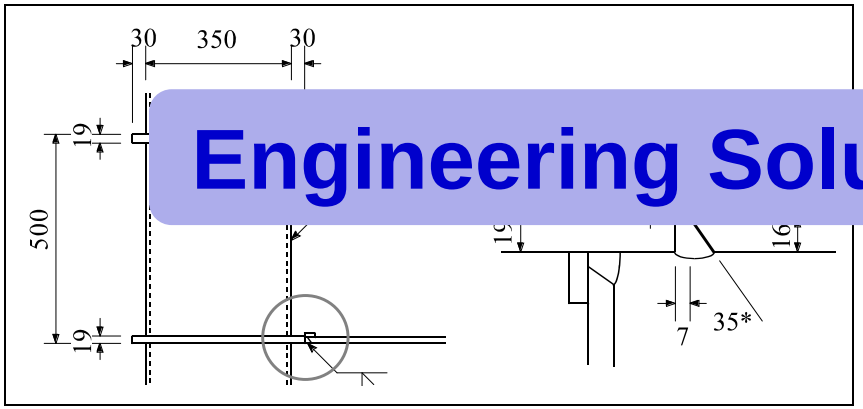

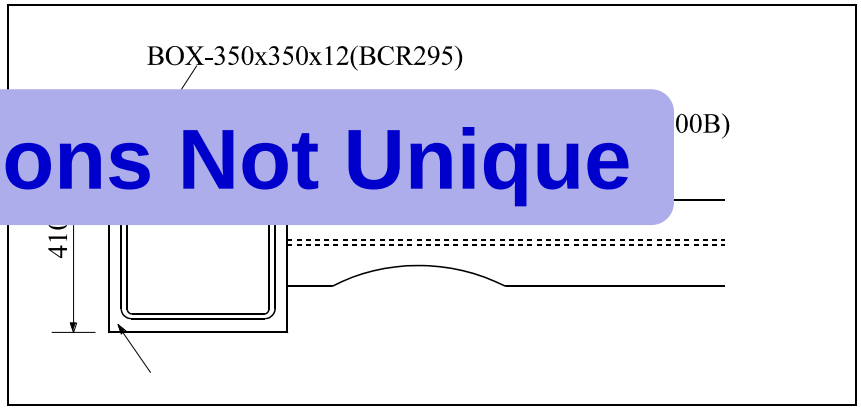

Engineering Solutions Not Unique

Japan's No-Hole

US RBS

Solutions Acceptable by Construction Industry are the "*Practical*" Solution!

Test Results and Performance

Today's Topics

Japan uses "peer-review" for introduction of new technology.

- **Acceptance of new technologies beyond what is explicitly stated in codes/regulations**
- **Fast track by peer-review versus slow standardization**

Japanese Design/Construction Hierarchy

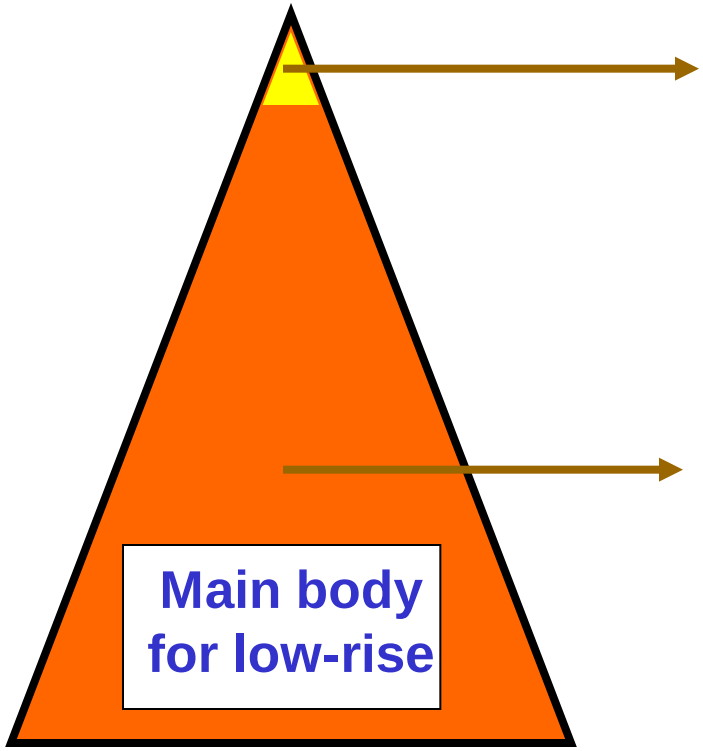

for Large Construction

- ❒ Inelastic analysis
- ❒ 3D analysis
- ❒ Time history analyses
- ❒ Site specific ground motions

for Small Construction

- ❒ Elastic analysis
- ❒ Static analyses

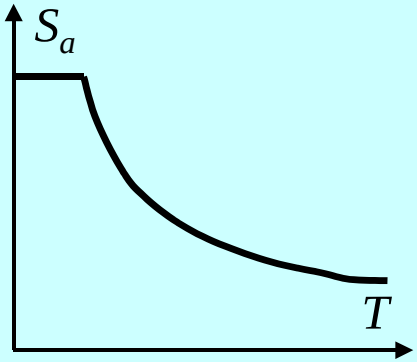

Peer-Review since 1980s

For Large, Special Construction

- ❒ Inelastic analysis
- ❒ 3D analysis
- ❒ Time history analyses
- ❒ Site specific ground motions

- ❒ Multiple agencies do exercise peer-review.
- ❒ Peer-review commonly consist of a few (two to three) individuals including people from academia and industry.
- ❒ Peer-review period is commonly one to three months.

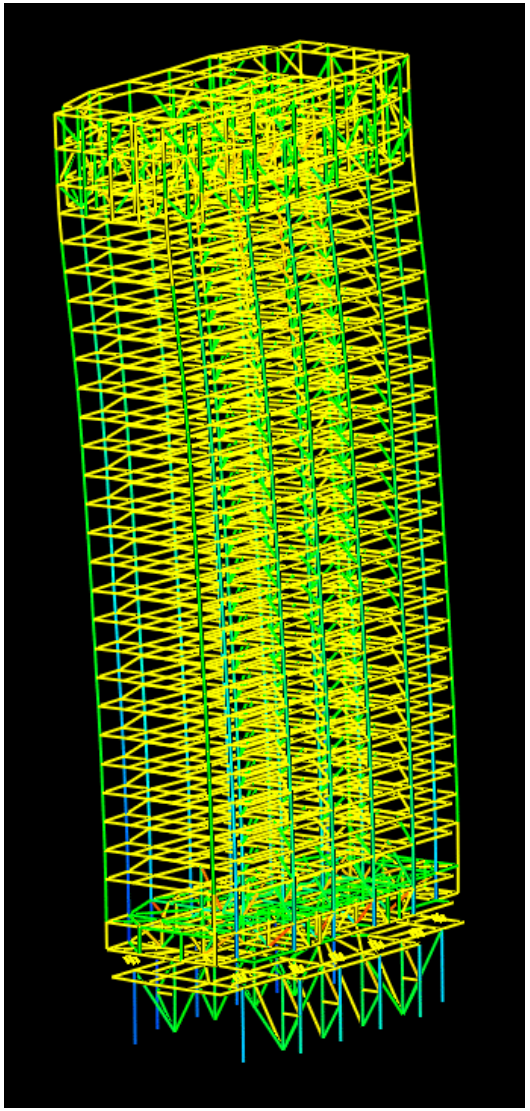

Time History Analysis Procedure

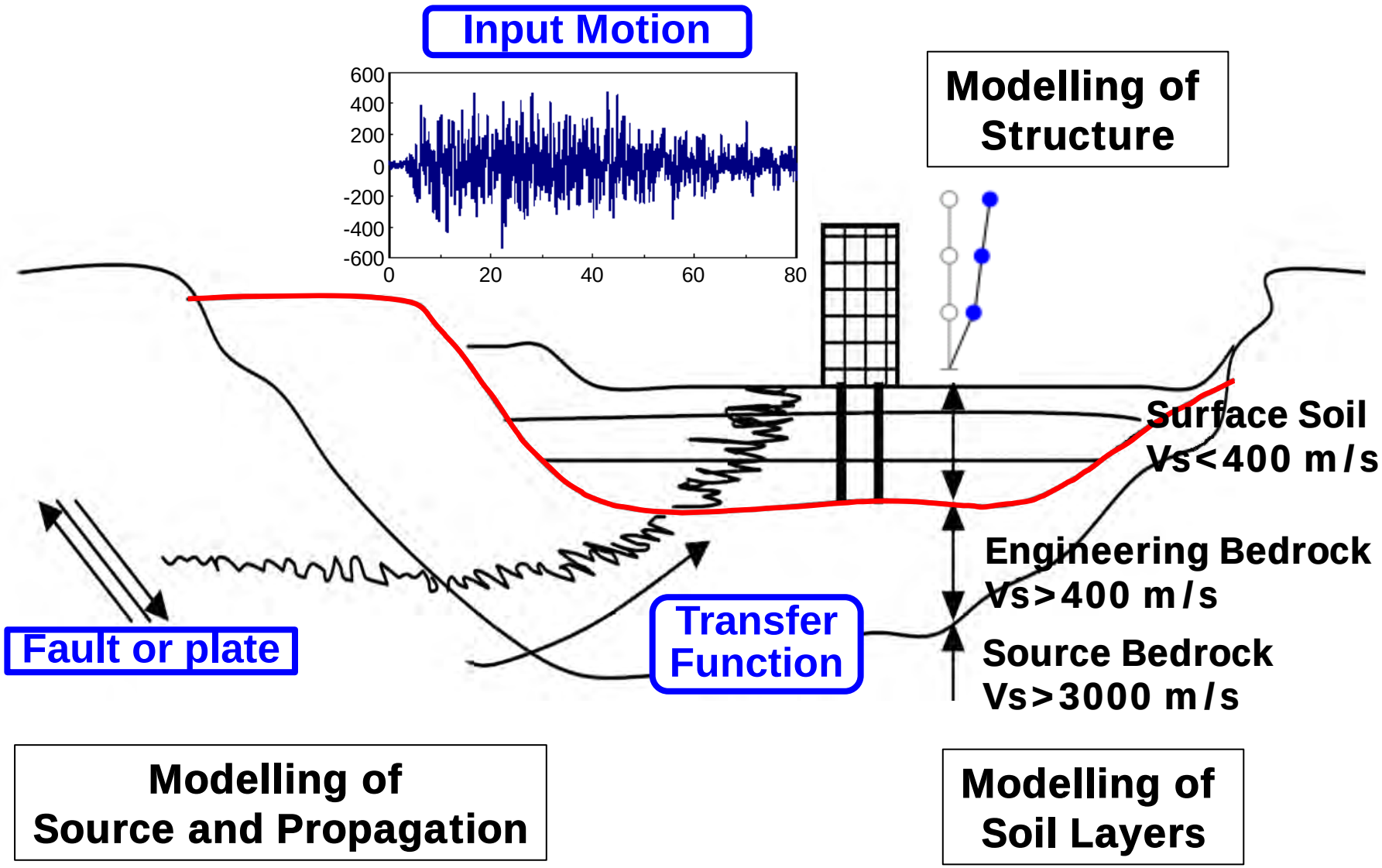

Approval of Construction / Design Methods

- Multiple agencies do exercise "approval of construction / design methods.
- Peer-review commonly consist of a few (two to three) individuals including people from academia and industry.
- Peer-review period is commonly one to three months.

Example Approval Objects:

Seismic Retrofit, Mechanical Anchoring / Joints, RC Structures, PC Structures, Composite Structures, Steel Structures, Seismic Elements, Seismic Dampers, Seismic Braces, Underground Walls, Earth Anchors, Ground Sheeting, Pile Foundations, Pile Caps, Steel Pile Joints, Pile Foundations, Earth Strengthening, Earth Modification, Quality Control, Fire Resistance, New Materials, etc.

Negative Aspects of Peer-Review

Positive Aspects:

- ❒ **Prompt acceptance and according exercises to practical applications → CFTs, BRBs, High-strength concrete, dampers, isolation, control, etc.**

- ❒ **Explicit collaboration between research and practice → acceptance of dampers, control, isolation , etc.**

Negative Aspects:

- ❒ **Little incentives to write explicit codes that can generalize design/construction. → Lack of general design of BRBs and CFTS.**

- ❒ **Limited dissemination beyond Japan → "Galapagosization" problem**

Summary of Today's Topics

- Japan is Green, featured with "Wood Culture".
- Japan loves "detailing", which characterizes Japanese architecture.
- Japan loves handcraft and manufacturing.
- Japan exercises positive collaboration between design and construction (manufacturing)
- Japan uses "peer-review" for introduction of new technology.

Closure

I wish the very best of a great success in the advancement of design and construction of building structures in Turkey. I would be happy if today's presentation of mine is of any help in further, positive collaboration, both research and practice, between Turkey and Japan.